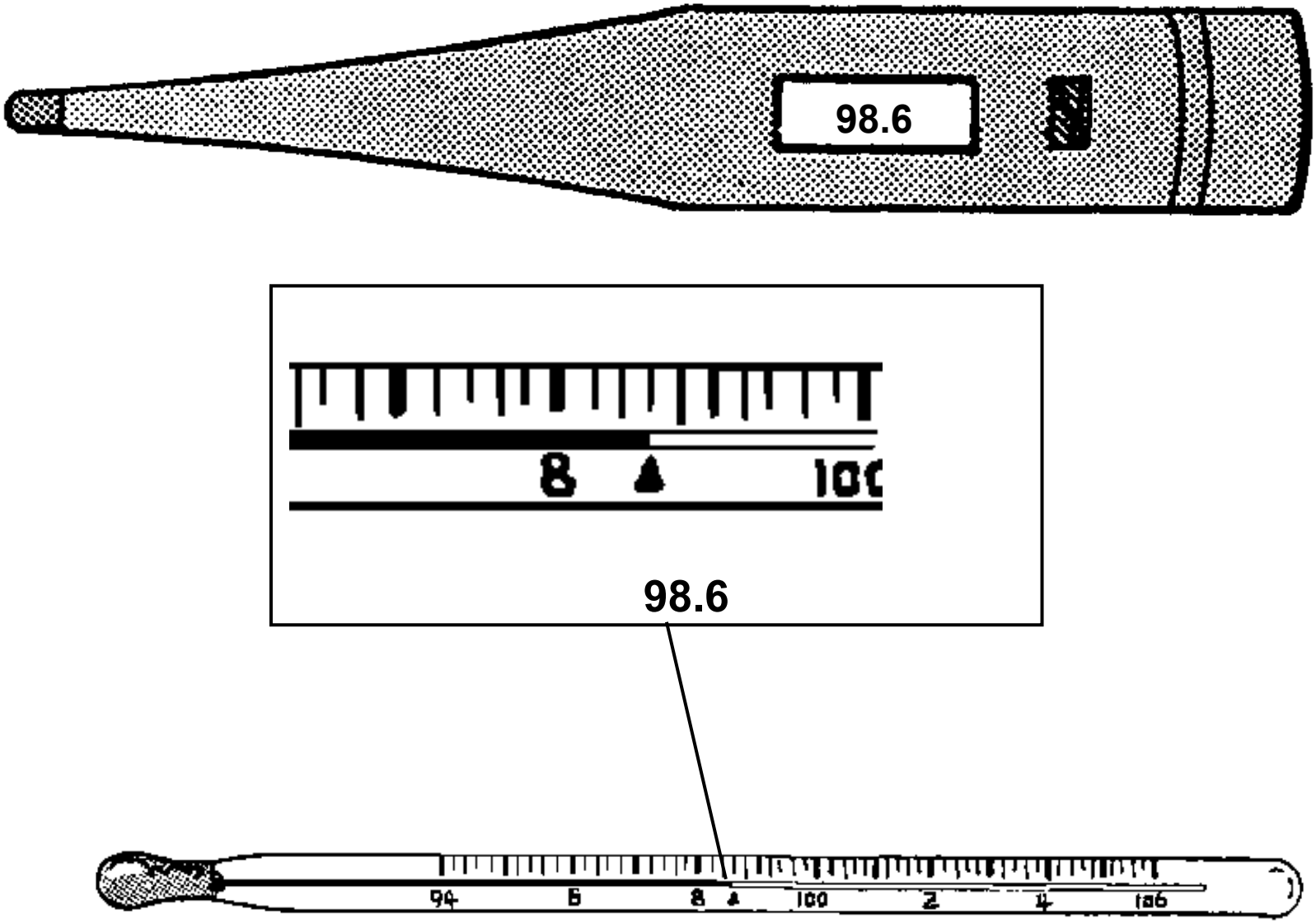
98.6
8
100
98.6
94
6
8
100
2
4
106